OPERATOR'S MANUAL

for the

TDA-2E Series
Aerosol Photometer

TDA-2E, TDA-2EN, TDA-2EL, TDA-2ENL

Air Techniques Int'l
Division of Hamilton Associates, Inc
11403 Cronridge Drive
Owings Mills, MD 21117 USA
TEL 410-363-9696
FAX 410-363-9695
www.atitest.com

TDA-2E

You have just obtained a fine apparatus which will give years of service with little or no maintenance-provided it receives proper care. Please follow the operating instructions to obtain the best use of this instrument.

REFERENCES

The TDA-2E apparatus is referenced for use in many standards, specifications, and publications referring to particulate detection. A list of these is provided on Page ##.

GENERAL INFORMATION

The TDA-2E is a completely self-contained near forward light scattering linear photometer. It operates on 110 volt 50/60 cycle current or other voltages as required. The basic function of a photometer is to sample air or gas and react to any particulate being drawn through the sampling train. The photometer consists of distinct sections, each working with the others to provide the desired result.

The TDA-2EN Particulate Detection Unit is a near forward light scattering photometer based on the TDA-2E, but modified for nuclear use. The sampling system and, in particular, the smoke chamber component of the scattering chamber, is designed so that the individual components can be easily replaced in the event of contamination. The pump is protected from contamination by a replaceable high efficiency filter. All replaceable parts are in a spare parts kit, T2EN-0580, that is an optional accessory. This kit contains two complete sets of components.

1. Sampling Train

a. The vacuum pump is the source of sample flow for the instrument. It is a continuous duty, oil-less type, capable of providing a 1 cfm of flow.

b. A valve directs the airflow to the scattering chamber. The “CLEAR” position directs clean air from a high efficiency filter to the scattering chamber. The “UPSTREAM” position permits sampling of the upstream concentration, and the “DOWNSTREAM” position permits sampling of the downstream concentration.

2. Scattering Chamber

While the scattering chamber is an integral part of the sampling train, it is also a major component in itself since it is a complex electrical-optical unit. The scattering chamber consists of a pair of hollow cones connected at the apexes, a light source that is focused where the cones meet, a pair of collimating lenses to straighten the light emanations from the light source, and a condensing lens that focuses the scattered light on the phototube.

3. Amplifier

The signal from the photomultiplier tube in the scattering chamber is delivered to an FET operational amplifier capable of a gain increase of 2,500,000. The amplifier augments the phototube signal in a linear fashion and is fed simultaneously to the front panel indicator meter, the remote scanning probe and the 0-1 VOLT DC recorder jack.

4. TDA-2EL & TDA-2ENL

These units have a log range in addition to the standard 5 linear ranges. The log range compresses all 5-linear ranges into one sweep of the meter. This feature allows the user to pinpoint leaks without the necessity of changing ranges to remain within scale.

HOW IT WORKS

When air or gas is drawn through the scattering chamber by the vacuum pump, any particulate matter in the sample flow will pass through the focal point of the cone. This scatters light into the normally dark area of the cone. The phototube is activated by the scattered light and sends a signal to the amplifier. The amplifier augments the signal linearly and sends it to the front panel indicator meter, the remote scanning probe and the 0-1 VOLT DC recorder jack.

The main use of the instrument is for detection of particulate matter in air or gas, registering the concentrations encountered on the various readout scales. Detectable particle sizes range from below 0.1 micron to approximately 100 microns. Experience has shown that particulates of various shapes and sizes give an exponential reaction when passed through the apparatus-theoretically, 100 one micron particles or 10 ten micron particles will give the same reaction. Therefore, since the instrument will read concentrations of particulate matter (regardless of size, shape or color) many applications are possible providing a 100% base line of aerosol is established with the unit. It is then possible to take samples of an atmosphere and read the concentrations in relation to the base.

The most common use of the instrument is the measurement of leaks in high efficiency filter systems. In establishing the integrity of a filter bank it is necessary to use a challenge agent such as aerosolized polyalphaolefin (PAO) or DOP as a test aerosol. The challenge agent is used because there is not enough particulate in the ambient air to provide a valid test.

The test aerosol should be introduced into the upstream side of the filter or filters as far from the filters as is practical to insure adequate mixing. 10 duct diameters are considered ideal. A sample of the aerosol-air mixture should be taken from the upstream side, close to the filters. This sample is used to set the 100% base line since it is the concentration of the challenge aerosol. The apparatus is adjusted as described in the Operating Section to set the 100% reading and then the straylight is adjusted. The straylight adjustment is necessary to compensate for any signal caused by dark current or reflection of internal surfaces of the scattering chamber. After these simple adjustments have been made the equipment is ready for checking leaks on the downstream side of the filters.

The filter test is performed with the use of the scanning probe. The filter and the perimeter of the filter pack should be scanned by passing the probe in slightly overlapping strokes so the entire area of the filter is sampled. The end of the probe should be held one inch from the filter surface. Separate passes should be made around the entire periphery of the filter, along the bond between the filter pack and the frame, and around the seal of the filter. Readings on the meter will indicate percent of penetration, and 0.01%, 0.1%, 1.0%, or 10% scales may be used as required. To avoid switching ranges, the log scale may be used on log units.

The scanning probe is supplied with 3 types of nozzles which can be screwed into the end of the flexible probe. The round Black nozzle is 1 inch (25 mm) in diameter which complies with National Sanitation Foundation Standard #49. The round Red nozzle is an Isokinetic nozzle which complies with many standards. The rectangular Blue Isokinetic nozzle is used for faster scanning techniques and is also acceptable by many standards.

DETAILED OPERATING INSTRUCTIONS

A. Warm-up

1. Set all switches to OFF position.
2. Remove line cord and scanning probe from the inside cover of the case.
3. Plug line cord into the POWER IN connector then into the appropriate power source.
4. Attach probe to EXT METER jack and DOWN STREAM fitting by use of the phone plug and the tubing connection. Check that the plug is inserted completely into the jack and that the tubing connector is secure.
5. Set selector switch to 100% position; this will protect the electronics during the warm-up period.
6. Set selector valve to CLEAR position; this permits air to be drawn through the internal reference filter and provides clean air for the scattering chamber.
7. Depress POWER and PUMP switches; this activates the unit. A 30 second delay may occur before switches illuminate.
8. Allow 10 minutes warm-up time for temperature stabilization.

** A scanning probe is optional on TDA-2EN and TDA-2ENL models.*

B. 100 % and Straylight Adjustments

1. Turn selector switch to the least sensitive range, LOG or 100%.
2. Set selector valve to UPSTREAM position. This changes the air route from the reference filter in the unit to the UPSTREAM sampling port on the front panel.

NOTE: The upstream sample line should be the same length (12 feet) as the downstream sample line or scanning probe.

3. Insert UPSTREAM line into aerosol air mixture being used for testing. The sample should be drawn from the upstream side of the test duct, as close to the filter as possible.
4. Adjust the GAIN control until a reading of 100 is obtained on the meter. This establishes the upper limit of measurement and provides a direct readout for the lower scales. Since this sample (100% reading) is drawn from the turbulent side of the filter system, the reading will usually vary. Averaging the reading on the indicator is recommended for proper GAIN adjustment. For example, if the reading varies from 60 to 100 on the meter, adjust the GAIN control for no lower than 80. This will still establish 100% base for all downstream readings.
5. Set selector valve to the CLEAR position to provide clean, particulate free air for the scattering chamber.
6. Set selector switch to the 0.1% range or the most range to be used during testing.
7. Adjust STRAYLIGHT control to obtain a reading of 0.0 on the meter. This adjustment compensates for an incidental light or electronic noise in the system. This establishes the 0.000% base line.

NOTE: An ideal upstream aerosol concentration is between 10 and 100 micrograms per liter of airflow. Occasionally a situation occurs when the system being tested uses large volumes of air causing dilution of the aerosol. Should this be the case and a problem arises with respect to obtaining a 100 reading, then every effort should be made to introduce additional aerosol so that the 100 reading may be obtained.

8. If alarm feature is desired, adjust STRAYLIGHT control for a reading two increments below the point at

which you wish the alarm to activate. Then turn the AUDIBLE ALARM switch to ON position and slowly rotate clockwise until the alarm stops. Next readjust STRAYLIGHT control for zero. Whenever a reading exceeds your set point, the alarm will reactivate.

C. Ready for Testing

After the 100% baseline is established the unit is ready for use. Testing is performed as follows:

1. The scanning probe may be used with both the meter on the panel and the meter on the probe.
2. Set the selector switch to the desired testing range.
3. Turn the selector valve to the DOWN STREAM position to permit sampling through the probe.
4. Pass the nozzle of the scanning probe over the area being tested at a traverse rate of not more than 6 seconds per foot 1" from the surface.

Readings on the meter are directly in percent of penetration. If the penetration is too high to be read on the current scale then the selector switch should be set to one of the less sensitive scales as required to make the readings. This step is not necessary with the Log-Linear unit.

D. Use of Internal Reference Feature

This instrument is equipped with an internal reference feature that permits a reference to a concentration equivalent to 100 micrograms per liter of aerosol. Please note that the internal reference feature is to be used as a reference point only. It is not essential to the operation of the photometer. This feature allows the user to sample an unknown quantity of aerosol and get an instantaneous readout in micrograms per liter of aerosol concentration. It also allows the user to adjust the photometer for a calculated GAIN level when access to the upstream challenge concentration is not possible.

When the internal reference (INT REF) switch is depressed a secondary light source is activated. The activated light source is set so that a gain adjustment to 10% results in a 100% response to 100 micrograms per liter of aerosol. Lower concentrations will read accordingly.

EXAMPLE: If an upstream sample is taken and a reading of 75 on the 100% range is obtained, this indicates a 75 microgram per liter concentration. Suppose a sample of the ambient air is taken and a reading of 80 on the .1% range is obtained. This indicates a concentration o 0.08 micrograms per liter of ambient air.

If a filter's challenge concentration is known but a sample is unavailable to establish 100%, a calculated value may be obtained to allow the proper INT REF setting using the following formula:

$$\frac{100}{KnownConcentration} \text{ X } 10 = \text{Proper INT REF}$$

EXAMPLE:

Known Concentration = 20 micrograms per liter

$$\frac{100}{20} \text{ X } 10 = 50 \text{ Proper INT REF Setting}$$

Known Concentration = 125 micrograms per liter

$$\frac{100}{125} \text{ X } 10 = 8 \text{ Proper INT REF Setting}$$

In other words, we are increasing the INT REF setting as indicated by a higher GAIN to compensate for the lower concentration in the first example. Since we have only 20 micrograms instead of the usual 100 microgram concentration, we must increase the GAIN. We only have 1/5 of the 100-microgram concentrations, so we must increase the INT REF setting by 5 times. Thus we increase the INT REF from 10 to 50 in the first example.

Conversely, in the second example, we are decreasing the INT REF setting to

compensate concentration in excess of 100 micrograms per liter.

1. Set valve to the CLEAR position to provide clean air for the scattering chamber.
2. Set selector switch to 10% position.
3. Adjust the STRAYLIGHT control fully clockwise to the off position.
4. Depress the INT REF switch; this initiates a secondary light source that serves as a known input to the phototube.
5. Adjust the GAIN control to obtain a meter reading of 100 plus or minus 2 in the 10.0% range.
6. Release the INT REF switch; this deactivates the reference light.
7. Turn the selector switch to testing position, 0.1% or 0.01% position.
8. Adjust STRAYLIGHT control until a reading of 0 is obtained on the meter.

E. Maintenance

Very little maintenance is required for the apparatus since the only moving part is the part, which is a continuous duty, oil-less type, requiring no maintenance. However, it is necessary to avoid drawing any unusual amounts of dirt into the pump or into the other parts of the sampling system. This may be done by always setting the control valve to the CLEAR position when tests are not being performed, thus allowing filtered air to be drawn through the system. Drawing excessive amounts of contaminated air into the system may also be avoided by not permitting the probe to rest on the floor while the selector valve is in upstream or downstream. Common sense will dictate proper use. The only adjustments which the user should find necessary are adjusting the proper position of the lamp after replacement, adjustment of the phototube, or replacement of the fuses. If it is necessary to make any of the adjustments or replacements indicated above, the following procedure should be followed:

1. Disconnect the unit from the power source.
2. Place the unit on a table in front of you with the front of the instrument facing you.
3. Release the top panel by unscrewing the button head screws.
4. Lift the panel up and toward you slowly. Wires are of sufficient length to allow panel to be placed face down on table in front of instrument.

When the repairs or adjustments have been made replace the top panel by reversing the steps outlined above, making sure that the tubing to the vacuum pump is not pinched shut and that all wires are secured under the panel before tightening the screws.

Should the phototube or lamp require adjustment, open the case as indicated and proceed as follows:

1. Phototube Adjustment

a. Set the unit up as in Section A.
b. Insert the probe into the aerosol mixture used for testing. (Never insert the tube into the liquid product of the aerosol generator as you may harm the scattering chamber because the concentration is too great for practical use.)
c. Adjust GAIN control approximately 3 to 4 turns from full counterclockwise position.
d. Loosen wing nut on phototube housing and gently rotate phototube until the reading on the meter is at maximum. If this reading is greater than 100, turn gain control counterclockwise until the reading is 80-90. Carefully tighten wing nut.
e. If maximum reading obtained is less than 100, adjust gain control until a reading of 100 is obtained.
f. Adjust straylight in accordance with B.5, 6, and 7.

2. Straylight Adjustment

a. Set the unit up as in Section A.
b. Adjust GAIN control approximately 3 to 4 turns from full counterclockwise position.

c. Adjust straylight fully clockwise on .1% range.
d. Loosen locking screw on light source assembly.
e. Slide assembly back and forth and rotate until a minimum reading is obtained on the meter. If the needle on the meter should drop below zero, adjust the GAIN control clockwise to bring the needle up to above zero. Keep adjusting the lamp assembly and the GAIN control alternately until the reading cannot be reduced any further.
f. Holding the assembly firmly in place, tighten the screw.
g. Loosen knurled thumb nuts on small lens end plate and move around for minimum reading. Then retighten.
h. Loosen knurled thumb screws on lamp end plate and move around for minimum reading. Then retighten.

NOTE: If lamp replacement is required, only steps e., f., and h. need to be performed.

DO NOT PUT FINGER PRINTS ON LAMP

Other than possible adjustments for straylight or the phototube, problems which may arise are listed in the following chart of symptoms and causes.

Symptom	Cause
Unit inoperative	Unit not plugged in; line fuse blown; defective line cord.
GAIN or STRAYLIGHT Control inoperative	Amplifier fuse blown; defective integrated circuit.
STRAYLIGHT	Control valve in Upstream or Downstream; Scattering chamber dirty; Leak in sampling system, Excessive gain (concentration to low).
Pump inoperative	Carbon vanes clogged with dirt (refer to pump maintenance manual); defective switch.
Pump labors	Tubing in sampling system kinked.

NOTE: These symptoms and causes are general in nature and are given in order of possibility from warm-up to shut-down. To troubleshoot properly, begin with the first step and work toward the last since some causes may be from several symptoms. If repairs cannot be affected, unit should be returned to manufacturer for service. Be sure unit is properly packaged.

T2E0-0546 120V SPARE PARTS KIT

Quantity	Description	Item #
1	Phototube 931A	18
1	Integrated Circuit	27
2	Fuse AGC-1/4	2
3	Fuse MDX-5/220V 3AG 2.5	1
2	Lamp #1991	23
1	Scattering Chamber gasket set	-
1	Pump Repair Kit #K219	-
1	Filter #5500123	J

T2E0-0546 220V SPARE PARTS KIT

Quantity	Description	Item #
1	Phototube 931A	18
1	Integrated Circuit	27
2	Fuse AGC-1/4	2
3	220V 3AG 2.5 1	
2	Lamp #1991	23
1	Scattering Chamber gasket set	-
1	Pump Repair Kit #K219	-
1	Filter #5500123	J

T2EN-0580 SPARE PARTS KIT

Quantity	Description	Item #
2	Filter #5500123	J
2	Selector Valve	10
2	Glass Cone w/fittings	K
4	Brass Fittings 22 BH 6-6	6,7
8	Brass Fittings 269P 3/8 x 1/4	C,D,E,H
50	ft. Polyflo tubing—Black 3/8	-
3	ft. PVC Tubing—Clear	A,B,F,G

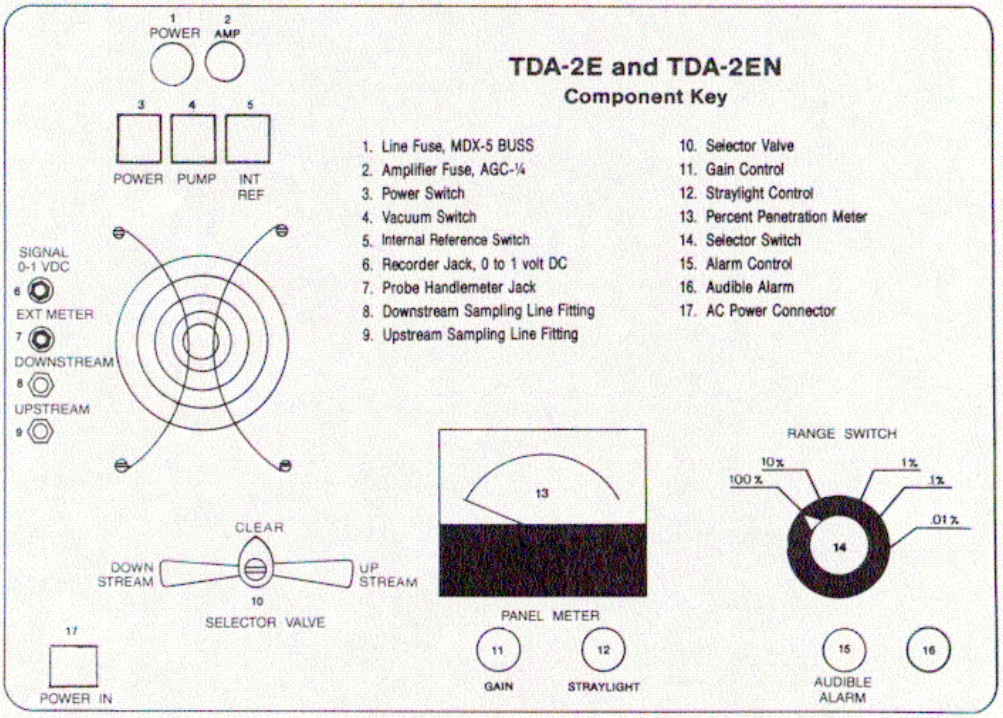

TDA-2E and TDA-2EN
Component Key

1. Line Fuse, MDX-5 BUSS
2. Amplifier Fuse, AGC-¼
3. Power Switch
4. Vacuum Switch
5. Internal Reference Switch
6. Recorder Jack, 0 to 1 volt DC
7. Probe Handlemeter Jack
8. Downstream Sampling Line Fitting
9. Upstream Sampling Line Fitting
10. Selector Valve
11. Gain Control
12. Straylight Control
13. Percent Penetration Meter
14. Selector Switch
15. Alarm Control
16. Audible Alarm
17. AC Power Connector

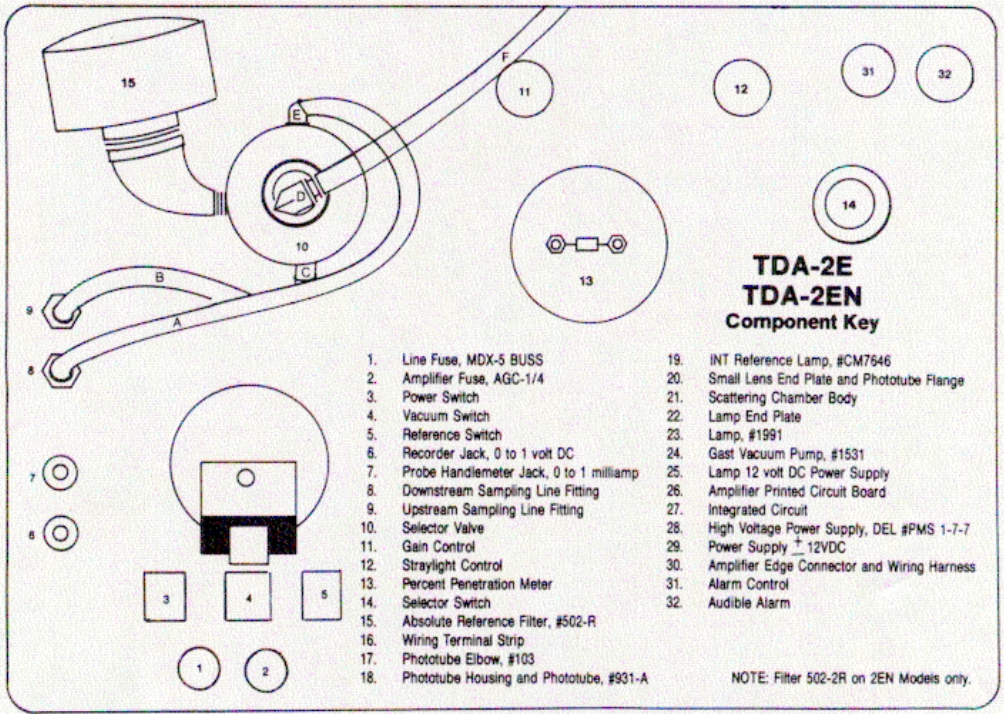

TDA-2E
TDA-2EN
Component Key

1. Line Fuse, MDX-5 BUSS
2. Amplifier Fuse, AGC-1/4
3. Power Switch
4. Vacuum Switch
5. Reference Switch
6. Recorder Jack, 0 to 1 volt DC
7. Probe Handlemeter Jack, 0 to 1 milliamp
8. Downstream Sampling Line Fitting
9. Upstream Sampling Line Fitting
10. Selector Valve
11. Gain Control
12. Straylight Control
13. Percent Penetration Meter
14. Selector Switch
15. Absolute Reference Filter, #502-R
16. Wiring Terminal Strip
17. Phototube Elbow, #103
18. Phototube Housing and Phototube, #931-A
19. INT Reference Lamp, #CM7646
20. Small Lens End Plate and Phototube Flange
21. Scattering Chamber Body
22. Lamp End Plate
23. Lamp, #1991
24. Gast Vacuum Pump, #1531
25. Lamp 12 volt DC Power Supply
26. Amplifier Printed Circuit Board
27. Integrated Circuit
28. High Voltage Power Supply, DEL #PMS 1-7-7
29. Power Supply ± 12VDC
30. Amplifier Edge Connector and Wiring Harness
31. Alarm Control
32. Audible Alarm

NOTE: Filter 502-2R on 2EN Models only.

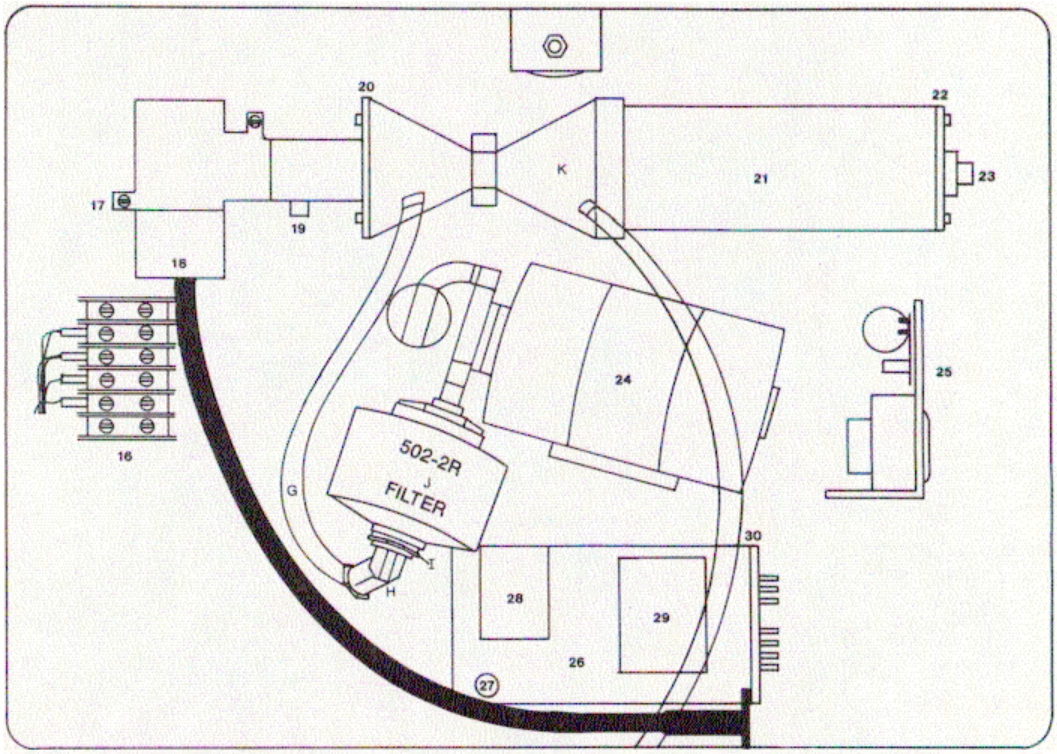
20
22
23
K
21
17
19
18
16
24
25
502-2R
J
FILTER
G
30
I
H
28
29
26
27

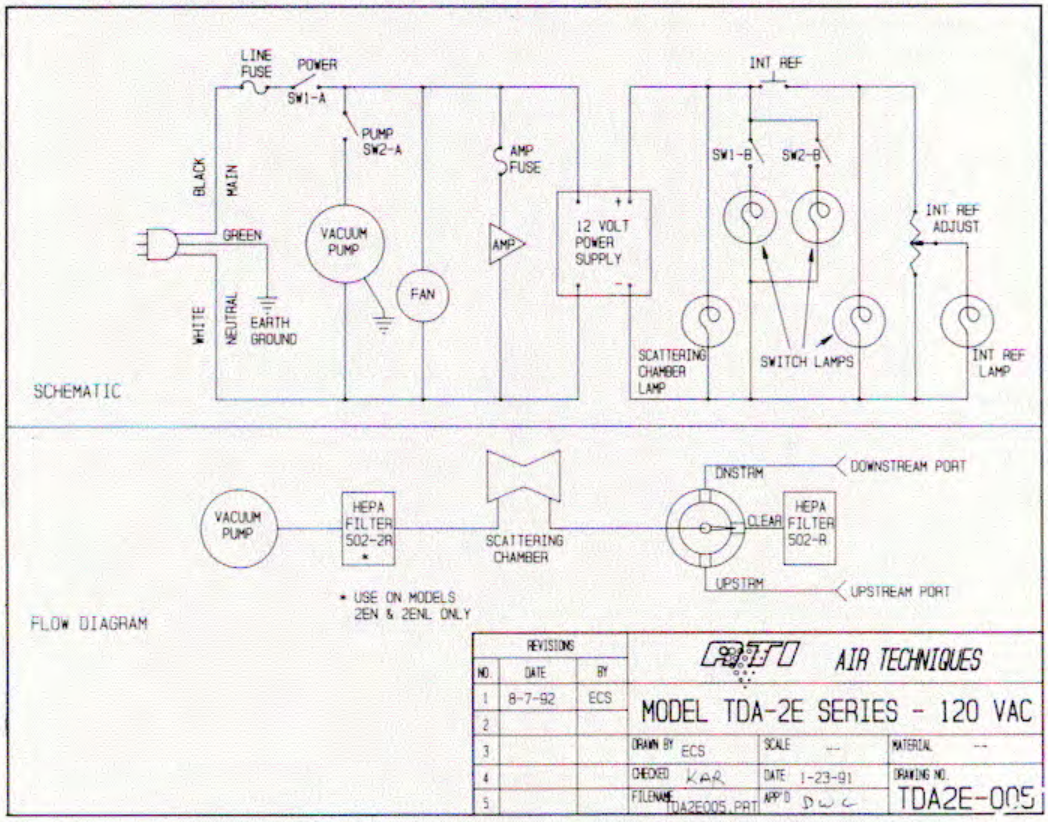
LINE FUSE
POWER
SW1-A
PUMP SW2-A
AMP FUSE
INT REF
SW1-B
SW2-B
BLACK
MAIN
GREEN
VACUUM PUMP
AMP
12 VOLT POWER SUPPLY
INT REF ADJUST
FAN
WHITE
NEUTRAL
EARTH GROUND
SCATTERING CHAMBER LAMP
SWITCH LAMPS
INT REF LAMP
SCHEMATIC
VACUUM PUMP
HEPA FILTER 502-2R *
SCATTERING CHAMBER
DNSTRM
DOWNSTREAM PORT
CLEAR
HEPA FILTER 502-R
UPSTRM
UPSTREAM PORT
* USE ON MODELS 2EN & 2ENL ONLY
FLOW DIAGRAM
REVISIONS
NO. DATE BY
1 8-7-92 ECS
2
3
4
5
AIR TECHNIQUES
MODEL TDA-2E SERIES - 120 VAC
DRAWN BY ECS
SCALE --
MATERIAL --
CHECKED KAR
DATE 1-23-91
DRAWING NO.
FILENAME TDA2E005.PRT
APP'D
TDA2E-005

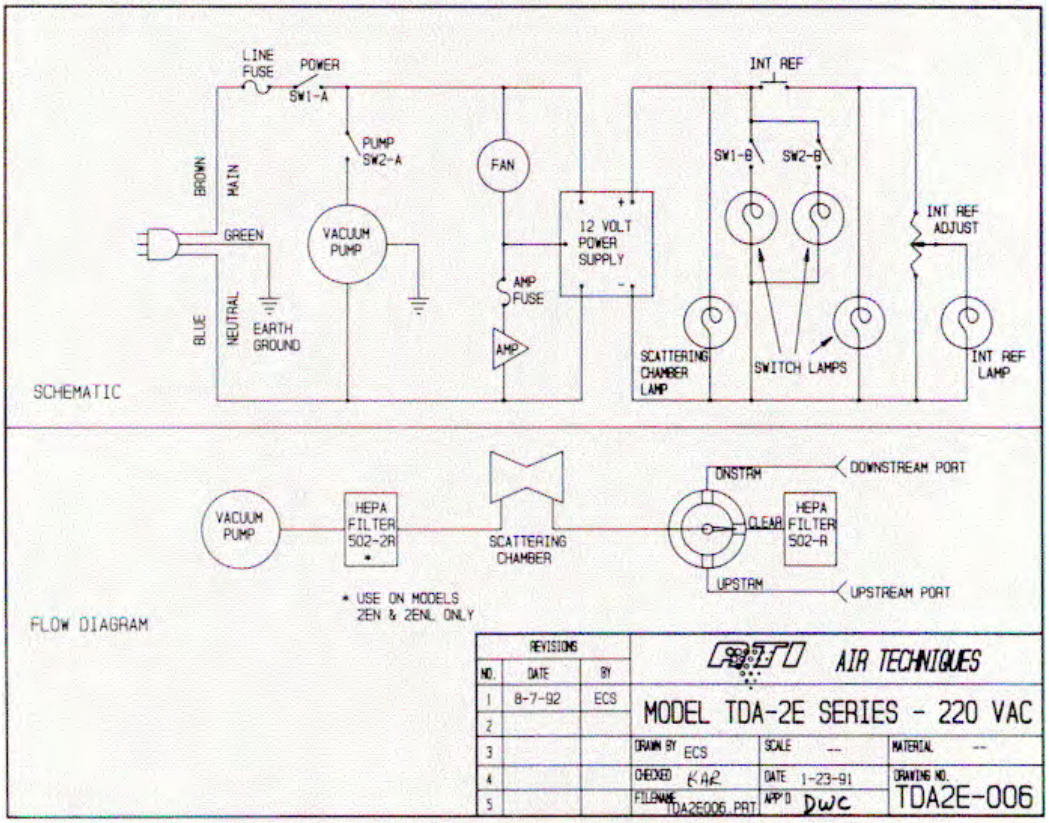

PART	DESCRIPTION
R1-R10	330k +/- 5% 1/4W
C1	0.002uF 500WV
C2	0.005uF 500WV
C3	0.01uF 500WV

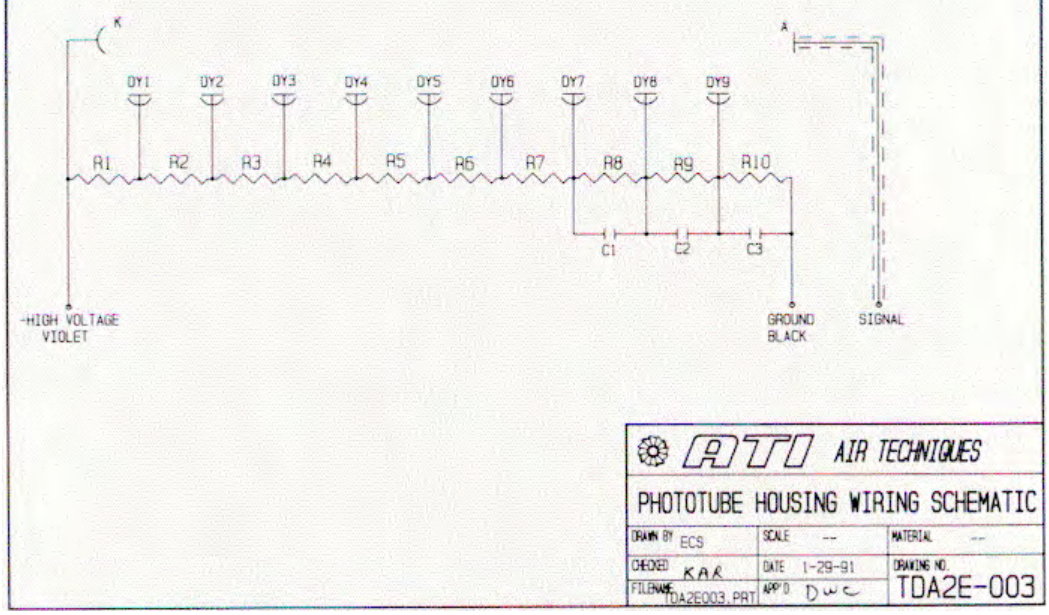

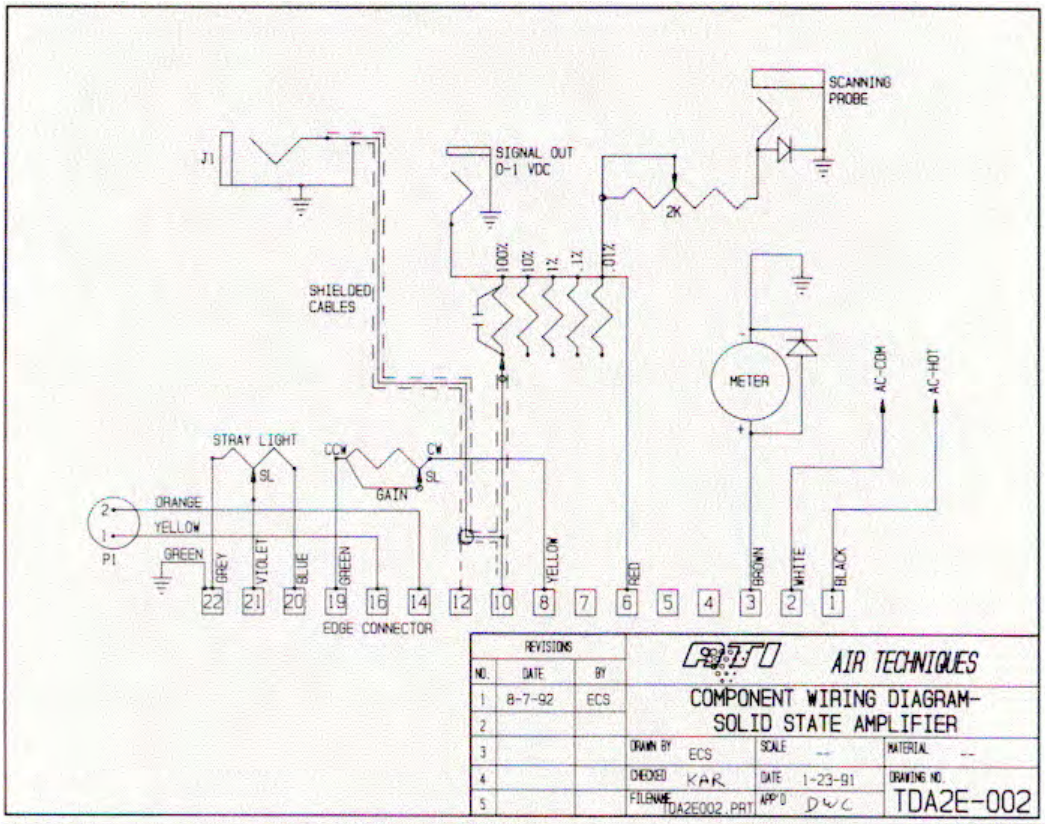
SCANNING PROBE
J1
SIGNAL OUT 0-1 VDC
2K
100%
10%
1%
.1%
.01%
SHIELDED CABLES
METER
AC-COM
AC-HOT
STRAY LIGHT
SL
CCW
CW
GAIN
ORANGE
YELLOW
GREEN
P1
GREY
VIOLET
BLUE
GREEN
YELLOW
RED
BROWN
WHITE
BLACK
22 21 20 19 16 14 12 10 8 7 6 5 4 3 2 1
EDGE CONNECTOR
REVISIONS
NO. DATE BY
1 8-7-92 ECS
AIR TECHNIQUES
COMPONENT WIRING DIAGRAM-
SOLID STATE AMPLIFIER
DRAWN BY ECS
SCALE --
MATERIAL --
CHECKED KAR
DATE 1-23-91
DRAWING NO.
FILENAME TDA2E002.PRT
APP'D DWC
TDA2E-002

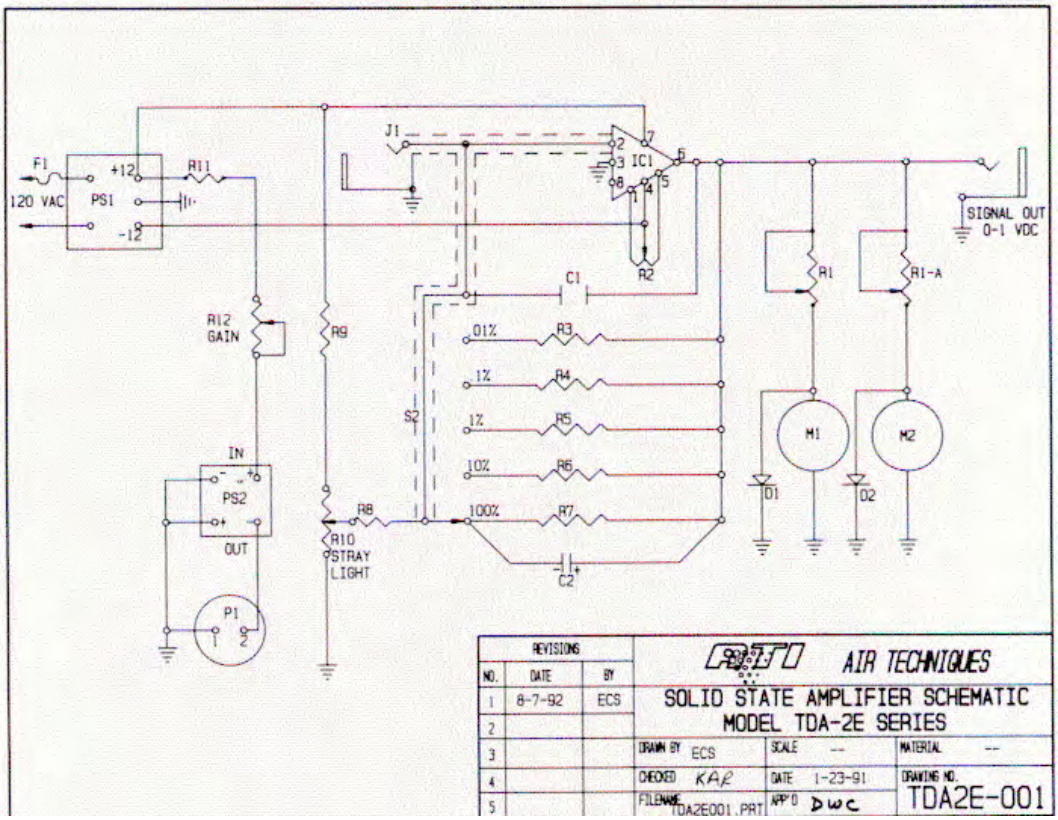
F1
120 VAC
PS1
+12
-12
R11
J1
IC1
R2
C1
SIGNAL OUT 0-1 VDC
R1
R1-A
R12 GAIN
R9
.01%
R3
1%
R4
1%
R5
10%
R6
100%
R7
S2
M1
M2
D1
D2
IN
PS2
OUT
R8
R10 STRAY LIGHT
C2
P1
REVISIONS
NO. DATE BY
1 8-7-92 ECS
AIR TECHNIQUES
SOLID STATE AMPLIFIER SCHEMATIC
MODEL TDA-2E SERIES
DRAWN BY ECS
SCALE --
MATERIAL --
CHECKED KAR
DATE 1-23-91
DRAWING NO.
FILENAME TDA2E001.PRT
APP'D DWC
TDA2E-001

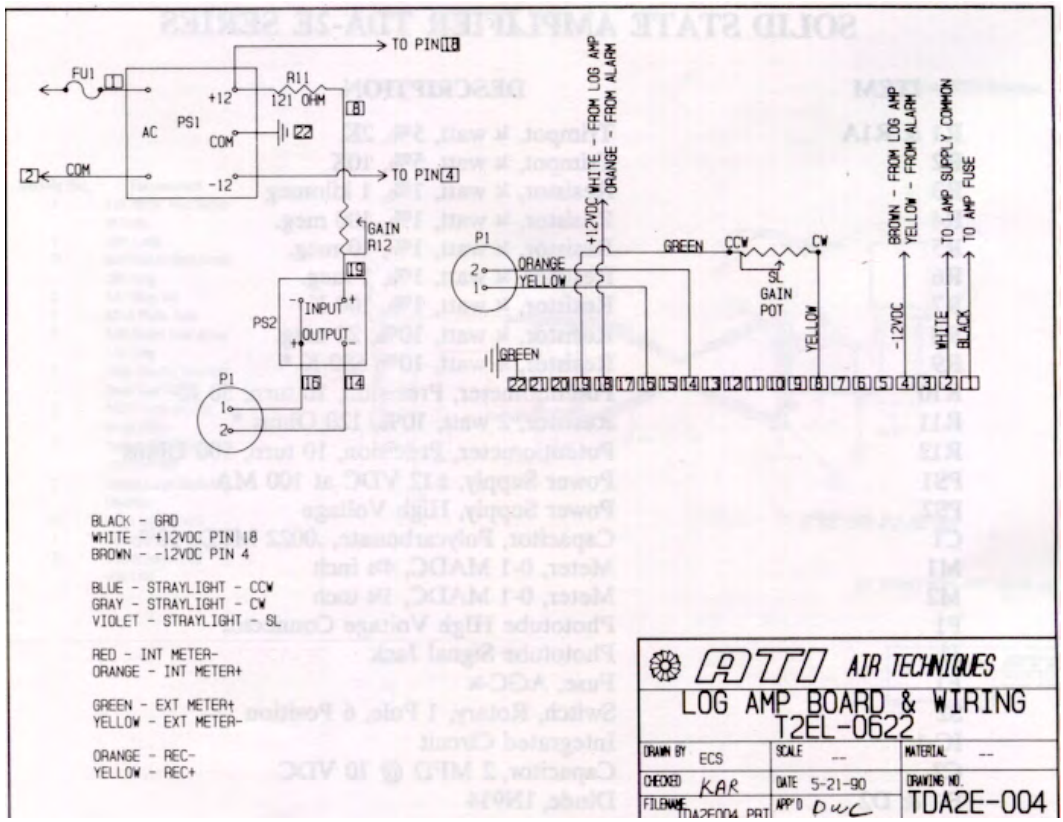

SOLID STATE AMPLIFIER TDA-2E SERIES

ITEM	DESCRIPTION
R1 & R1A	**Trimpot, ¼ watt, 5%, 2K**
R2	**Trimpot, ¼ watt, 5%, 10K**
R3	**Resistor, ¼ watt, 1%, 1 G**
R4	**Resistor, ¼ watt, 1%, 100 M**
R5	**Resistor, ¼ watt, 1%, 10 M**
R6	**Resistor, ¼ watt, 1%, 1 M**
R7	**Resistor, ¼ watt, 1 %, 100 K**
R8	**Resistor, ¼ watt, 10%, 22 M**
R9	**Resistor, ½ watt, 10% 680 K ***
R10	**Potentiometer, Precision, 10 turns, 50 K**
R11	**Resistor, 2 watt, 10%, 120 Ohms ***
R12	**Potentiometer, Precision, 10 turns, 500 Ohms**
PS1	**Power Supply, ±12 VDC at 100 MA**
PS2	**Power Supply, High Voltage**
C1	**capacitor, Polycarbonate, .0022 MFD, 10%**
M1	**Meter, 0-1 MADC, 4-½ inch**
M2	**Meter, 0-1 MADC, 1-½ inch**
P1	**Phototube High Voltage Connector**
J1	**Phototube Signal Jack**
F1	**Fuse, AGC- ¼**
S2	**Switch, Rotary, 1 Pole, 6 Positions**
IC-1	**Integrated Circuit**
C2	**Capacitor, 2 MFD @ 10 VDC**
D1 & D2	**Diode, 1N914**

***FACTORY SELECTED**

Item No.	Quantity Req.	Nomenclature
1	1	6-32 Fillister Head Screw 25 Long
2	1	1991 Lamp
3	12	8-32 Socket Head Screw .375 Long
4	2	8-32 Wing nut
5	1	931-A Photo Tube
6	2	8-32 Round head screw 1.19 Long
7	1	Photo Housing Assembly
8	1	Small lens TD2CD
9	3	8-32 Thumb nut H.H. Smith #1314
10	1	Gasket .625 OD x .500 ID x .031
11	2	Gasket Large Scattering Chamber
12	2	Large Lens TD1CD
13	1	Gasket
14	3	Thumb screw 8-32 .406 Long

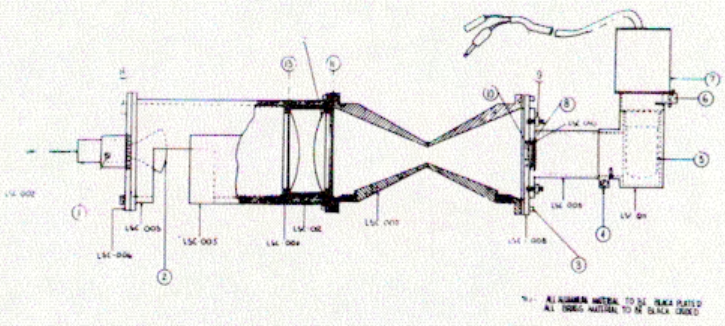

70-200
9-1-77

GAST MANUFACTURING CORPORATION

P.O. Box 97, Benton Harbor, Michigan 49022
Phone (616) 926-6171

Parts List for 1531-107B Oil-Less Vacuum Pumps and Air Compressors

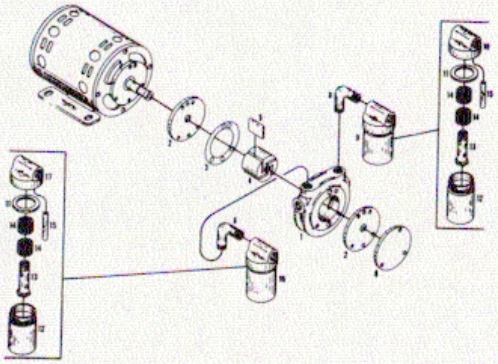

REF. NO.	DESCRIPTION	PART NO.	1531-107B Quantity
1	BODY	AG300	1*
2	WEAR PLATE	AG293	2*
3	BODY (SPACER) GASKET	AG296	1*
4	ROTOR	AD978	1
*5	VANE	AD979	4
6	RETAINER PLATE	AG297	1*
8	ELBOW	AD987	2
9	INTAKE FILTER	AA922H	1
10	COVER	AA965B	1
*11	COVER GASKET	AA932	1
12	JAR	AA935A	1
13	FELT SUPPORT	AA927	1
*14	FILTER FELT	AA928	2
15	SILENCING TUBE	AA739	1
16	MUFFLER	AA922G	1
17	COVER	AA965A	1
•11	COVER GASKET	AA932	1
12	JAR	AA935A	1
13	FELT SUPPORT	AA927	1
•14	FILTER FELT	AA928	2
15	SILENCING TUBE	AA739	1

• Denotes Parts included in Service Kit K219.
* Units manufactured prior to June, 1977 have a slightly different bolt hole pattern. Contact factory for correct part numbers.
When corresponding or ordering spare parts, please give complete model and serial number.

OPERATING and MAINTENANCE INSTRUCTIONS FOR #1531 OIL-LESS PUMP

CAUTION: Never lubricate oil-less air pump. The carbon vanes and grease packed motor bearings require no oil. The rotor is held in place with Loctite adhesive. Do not remove it.

STARTING: If the motor fails to start or hums, pull the plug and check the motor nameplate ratings. The guarantee is void if damage results from motor being improperly fused. Use a three (3) amp Slo-Blow fuse or equivalent in line to motor. If anything appears to be wrong with the motor, return the complete pump and motor assembly to the factory.

FLUSHING: Should excessive dirt, foreign particles, moisture or oil be permitted to enter the pump, the vanes will act sluggish or even break. Flushing of the pump should take care of these situations. In order to flush a pump, remove the filter and muffler assemblies and introduce several teaspoons full of solvent* into the pump through the intake WHILE THE PUMP IS RUNNING. Repeat the flushing procedure and if it does not remedy the situation, remove the end plate for further examination. Periodic flushing is recommended.

FILTERS: Dirty filters restrict air flow and if not corrected could lead to possible motor overloading and early pump failure. Check filters periodically and clean when necessary by removing felts from the filter and washing in a solvent*. Dry with compressed air and replace.

DISASSEMBLY: Remove the three screws which attach retainer plate to body. Now remove the retainer plate and carbon wear plate and you have success to the vanes. Use compressed air to clean out the pump chamber. The carbon wear plates have two (2) usable sides. When one side is worn, simply flip it over but use if on the same end of the pump. DO NOT REMOVE THE ROTOR. It is held in place by Loctite and should only be serviced by an authorized service facility. Do not loosen or remove the body “thru-bolts”. To reset clearance between top of rotor and top of bore of the body, just LOOSEN the four (4) screws that attach body to electric motor. DO NOT REMOVE BODY of pump because an exact factory determined body spacer gasket provides necessary clearance. After the four (4) screws are loosened, place a .001” feeler gauge between the top of the rotor and the body, holding the body in position while the body bolts are tightened. Withdraw the feeler gauge and rotate the rotor to be sure all points clear the bore.

REASSEMBLY: Simply place carbon plate and retainer plate in position, add and tighten the three (3) end plate screws. Should the pump still fail to produce proper vacuum or pressure, send to authorized service center for repairs.

*Recommended Solvents: Loctite Safety Solvent, Inhibisol Safety Solvent and Dow Chemical Chlorothane. DO NOT USE KEROSENE.

DANGER: To prevent explosive hazard, do not pump combustible liquids or vapors with these units.

It is usually quickest and least expensive to send the unit in for repair. Authorized service facilities are located at:

Brenner-Fielder and Associates
16210 Gundry Avenue
Paramount, CA 90723
213/636-3206

Gast Manufacturing Corporation
515 Washington Avenue
Carlstadt, NJ 07072
201/933-8484

Gast Manufacturing Corporation
2300 M-139
Benton Harbor, MI 49022
616/926-6171

Wainbee, Ltd.
121 City View Dr.
Toronto, Ontario
Canada
416/248-5621

Wainbee, Ltd.
215 Brunswick Blvd.
Pointe Claire, Montreal, Quebec
Canada
514/697-8810

STANDARDS FOR CLEAN ROOMS, WORKSTATIONS & HEPA FILTERS

FED-STD- 209B, Par.50	FEDERAL STANDARD Clean Room and Work Station Requirements
AACC CS-IT	AMERICAN ASSOCIATION FOR CONTAMINATION CONTROL Standard for HEPA filters
AACC CS-2T	AMERICAN ASSOCIATION FOR CONTAMINATION CONTROL Laminar Flow Clean Air Devices
AACC CS-6T	AMERICAN ASSOCIATION FOR CONTAMINATION CONTROL Testing and Certification of "Particulate Clean" Rooms
IES RP-CC-001	INSTITUTE FOR ENVIRONMENTAL SCIENCES Recommended Practice for HEPA Filters
IES RP-CC-002	INSTITUTE FOR ENVIRONMENTAL SCIENCES Recommended Practice for Laminar Flow Clean Air Devices
IES RP-CC-006	INSTITUTE FOR ENVIRONMENTAL SCIENCES Recommended Practices for Testing Cleanrooms
IES RP-CC-0013	INSTITUTE FOR ENVIRONMENTAL SCIENCES Recommended Practice for Equipment Calibration or Validation Procedure
NSF STD. No 49	NATIONAL SANITATION FOUNDATION Class II (Laminar Flow) Biohazard Cabinetry
ANSI N101.1	AMERICAN NATIONAL STANDARDS INSTITUTE Efficiency Testing of Air-Cleaning Systems Containing Devices for Removal of Particles
ANSI/ASME N510	AMERICAN NATIONAL STANDARDS INSTITUTE/ AMERICAN SOCIETY FOR MECHANICAL ENGINEERS Testing of Nuclear Air-Cleaning Systems
AS	STANDARDS ASSOCIATION OF AUSTRALIA Cleanrooms, Workstations & Safety Cabinets – Methods of Test Part O: List of Methods & Apparatus

INTERNATIONAL DRUG GOOD MANUFACTURING PRACTICES (GMP)
JAN. 1990

FRANCE	15.A.3.5.2
AUSTRALIA	15.5 (AS 1386 & 1387)
UK	9.47 (BS 5295)
EGYPT	4.4.4
HOLLAND	13.2.2
NEW ZEALAND	4.1.1.1.9
ISRAEL	4.3.2.2.3

International Warranty

Air Techniques International

Air Techniques International, hereinafter referred to as ATI, warrants the equipment purchased hereunder to be free from defect in materials and workmanship under normal use and service, when used for the purpose for which it is designed, for a period of (1) one year from the date of shipment. ATI further warrants that the equipment will perform in accordance with the technical specifications accompanying the formal equipment offer.

ATI will repair or replace any such defective items that may fail within the stated warranty period, PROVIDED:

1. That any claim of defect under this warranty is made within thirty (30) days after discovery thereof and that inspection by ATI, if required, indicates the validity of such claim to ATI's satisfaction; and
2. That the defect is not the result of damage incurred in shipment to or from our factory; and
3. That the equipment has not been altered in any way whether as to design or use, whether by replacement parts not supplied or approved by ATI, or otherwise; and
4. That any equipment or accessories furnished but not manufactured by ATI, or not of ATI design, shall be subject only to such adjustments as ATI may obtain from the supplier thereof.

ATI's obligation under this warranty is limited to the repair or replacement of defective parts with the exception noted above. If the equipment includes a scattering chamber, ATI's warranty does not extend to contamination of the scattering chamber by foreign material.

At ATI's option, any defective equipment that fails within the warranty period shall be returned to ATI's factory for inspection, properly packed with shipping charges prepaid. No equipment shall be returned to ATI without prior issuance of a return authorization by ATI.

No warranties express or implied, other than those specifically set forth herein shall be applicable to any equipment manufactured or furnished by ATI and the foregoing warranty shall constitute the Buyer's sole right and remedy. In no event does ATI assume any liability for consequential damages, or for loss, damage or expense directly or indirectly arising from the use of ATI products, or any inability to use them either separately or in combination with other equipment or materials or from any other cause.